AIRTEC INTERNATIONAL LTD

New Master 35® Low Emission Impact Wrench

+44 (0) 141 552 5591
enquiries@airtecinternational.co.uk
40 Couper St, Glasgow, G4 0DL

www.airtecinternational.co.uk

DECLARATION OF CONFORMITY

To whom it may concern

We Airtec International Ltd Couper Street GLASGOW G4 0DL United Kingdom declare that we are solely responsible for the supply/manufacture of the

Master 35® Petrol/Gasoline Impact Wrench 1" Square Drive powered by special Emak Engine

Serial No. MA _____

Detailed information on weight, noise, vibration etc. is contained in this Operation Manual to which this declaration relates and is in conformity with the relevant standards of the undernoted European Union.

2006/42/EC Machinery Directive

In addition to the above Laws the Wrench meets the manufacturing standard UNI EN12100 relating to the priciples of good Engineering practice and design.

ITALY

BARCO DI BIBBIANO (RE)

(Place and date of issue)

A. BISSOLI

AIRTEC S.r.l.
Via Tarantelli n° 2-4
42021 BARCO di BIBBIANO (RE) ITALY
Tel. 0522 246518 r.a. - Fax 0522 246520
Cod. Fiscale e Partita IVA 00657060356

(Name and signature of authorised Person)

(Name and signature of authorised Person)

Company Directors: A. Bissoli (Italy) and A. Kilpatrick

Company Secretary: A. Kilpatrick

Registered in Scotland 135384

© Airtec International Ltd. All Rights Reserved. No reproduction of whole or part of this Manual is allowed without written Permission of Copyright.

CONTENTS

Uses & Technical Information	1
Safety Precautions	2
Operating Controls – Illustrations	3
Operating Controls – Instructions for use	4
Start/Stop Operation	5
Basic Workshop Safety Rules	6
Routine Service	7
Motor - Repairs	8
Motor Parts - Exploded Diagram Drawings and Parts Lists	10
Impact Unit - Repairs	15
Impact Unit & Gearbox – Exploded Diagram Drawings and Parts Lists	16
Troubleshooting Advice	19
General Information	19
Workshop Tools	20
Accessories	21

USES

The Master35© Impact Wrench is ideal for removing/fitting Chairscrews (Lag Screws) and Fishplates (Joint Bars) where track possession is not possible, if there are access difficulties or if other sources of power e.g. Air Compressors, Generators or Power Packs are not available. The Master can drill holes in Wooden Sleepers (Ties) using our Safety Quick Release Attachment which allows the fitting/removal of Auger Bits in seconds.

If there is track possession it can be fitted to one of our Braked Tool Carriers which then makes it easier for the operator to use in both a vertical and horizontal position. The Tool Carrier carries the weight not the operator.

Most Screwed Fasteners can be removed/fitted in under three seconds.

TECHNICAL INFORMATION

1. BOLT CAPACITY

16 to 32mm - (⅝" to 1 ¼") diameter

2. DIMENSIONS

Length	600mm (23 ⅝")
Height	284mm (11")
Width	452mm (17 ¾")

3. ENGINE

Two stroke/cycle low emission Special Airtec EMAK 065 63.4 c.c. complying with EUR5 and EPA Standards

Maximum free speed	9,500 rpm
Power	3.4 HP 2.6 kW @ 7800rpm Fuel
Tank capacity	0.8 Litres (1.20 pints)

Fuel Mixture ratios

Petrol/Gasoline Unleaded minimum 89 Octane, Gasohol with less than 10% Ethanol or E10 fuel with two stroke oil

MIX OIL	RATIO	MLS.PER LITRE	OZS. PER US GAL
Mineral	25:1	40	3
Synthetic	50:1	20	1 ½

⚠ **DO NOT use 2 stroke Outboard Motor Oil**

⚠ **The best fuel to use is Aspen 2. See our website for more information.**

4. GEARBOX

Fill with 0.25 Litre (½ pint) of Gazpromneft Reductor CLP68, Mobil Gerar 626, Carter EP68, Merpoa 68, Valvoline 80-90W or an equivalent non synthetic 68 viscosity Gear Oil to half way up sight glass with Wrench in the horizontal position. Change Oil every twelve months.

5. IGNITION – DIGITAL

Spark Plug Champion RCJ-4 or equivalent. Gap should be 0.5mm

6. IMPACT MECHANISM

Fill with 130 grammes (4 ½ oz) of Molybdenum Disulphate Grease, Castrol MS3, Klubern N12MF, Valvoline NLG 1 # 2 or equivalent Grade 2 quality.

7. NOISE

Operation levels based on ISO3744

Acoustic Pressure (LpA)	101.7 dBA
Power (LWA)	114.8 dBA

⚠ Always wear ear protection

8. SQUARE DRIVE

Standard 1" (25.4mm)

9. TORQUE RANGE

(500 – 2,500Nm) or (350 to 1850 ft/lbs) approximately. It is possible to generate higher torques under special conditions. The Master will loosen any screwed fastener previously tightened by any other Petrol/Gas Driven Impact Wrench.

10. VIBRATION EXPOSURE

Vibration exposure is more important than vibration e.g. a low vibration machine which takes a long time to perform a task generates higher vibration exposure than a higher vibration machine which performs a task much more quickly. The following data is based on practical on track testing carried out in the UK in February 2020.

Fishplates/Joint Bar Nuts 43mm (1 11/16") Square – 2.25 seconds					
		EAV		ELV	
	Vibration	Trigger Time Minutes	No. of Fasteners	Trigger Time Minutes	No. of Fasteners
Tightening	12.28m/s²	20	533	80	2133
Loosening	11.05m/s²	25	667	98	2613
Chairscrews/Lagscrews 38.6mm (1 1/8") Square – 2.5 seconds					
		EAV		ELV	
	Vibration	Trigger Time Minutes	No. of Fasteners	Trigger Time Minutes	No. of Fasteners
Tightening	11.90m/s²	21	504	85	2040
Loosening	14.72m/s²	14	336	55	1320

11. WEIGHT

17.9 Kgs (39 ½ lbs)

© Airtec International Ltd. All Rights Reserved. No reproduction of whole or part of this Manual is allowed without written Permission of Copyright.

SAFETY PRECAUTIONS

BEFORE using the Impact Wrench read these safety instructions CAREFULLY and ensure you fully UNDERSTAND them. DO NOT allow untrained personnel to use the Wrench.

1. Wear suitable **PROTECTIVE CLOTHING**, safety boots, goggles, gloves and ear protection according to Company rules, working conditions or Government/State Legislation.

2. The effect of vibration exposure can be **REDUCED** by following a number of simple rules :-

a) Always wear protective gloves and keep hands warm and dry.

b) Ensure Wrench is properly maintained.

c) Do not use worn Sockets and ensure Wrench Anvil is replaced when worn. Use of our **NO GO GAUGE** allows quick and easy checks on Socket Square Drive and Anvil wear.

d) Share the workload whenever possible.

3. **FILL** the fuel tank carefully **BEFORE** starting the Wrench in a well ventilated area and avoid spillage. Use the Fuel Funnel provided or a Safety Fuel Can. ⚠ **DO NOT** fill or add oil while the Motor is running. Allow machine to cool before re-fueling, **DO NOT** over fill, allow for fuel expansion. Keep well away from naked flames or equipment which generates sparks e.g Rail Saw or Rail Grinder. Do not leave the mixture in the fuel tank for any prolonged period of time.

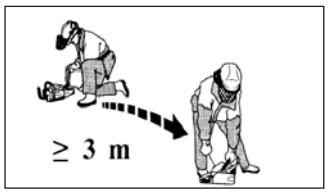

4. The exhaust is fitted with a Catalytic Converter to reduce emission levels to meet EUR5 and EPA 3 Standards. It will become **HOT** during and after use. Please **AVOID** direct contact.

5. Know where the controls are and how to use them and be able to **STOP** the Wrench quickly in an emergency.

6. Do Not Operate in confined spaces because of the danger of Carbon Monoxide being present.

7. Remove **FUEL FILLER CAP CAREFULLY** as pressure can build up in the tank. This is very important in warm weather, if the Wrench has been left in an exposed area or after prolonged periods of use.

8. ⚠ **DO NOT** wear hanging jewellery, a tie or loose or torn clothing.

9. Take up a **FIRM** footing and maintain a balanced body position

10. Check pull cord is not frayed or worn.

11. Use only **IMPACT QUALITY** Sockets and Accessories

⚠ **HAND** Sockets must **NEVER** be used

12. Use Rubber Rings and Steel Pins or other suitable retaining devices to retain the Socket or Accessory onto the Square Drive.

⚠ **DO NOT** use twigs, wire, nails or plastic straps.

13. Set the **GEAR CONTROL** in **NEUTRAL** before starting.

14. Check the Wrench for damage regularly. Ensure fasteners are tight at all times. A poorly maintained Wrench will be inefficient and produce extra noise and vibration

15. Switch **OFF ENGINE BEFORE** transporting the Wrench to another location.

16. Take **CARE** when **LIFTING** or carrying the Wrench - weight with fuel and excluding accessory approximately 18.5Kgs (40 ¾ lbs)

17. The engine has a break in period of 5 to 8 hours. During this time the engine may emit some smoke.

**SAFETY IS EVERYONE'S RESPONSIBILITY.
THINK, ACT, BE SAFE**

OPERATING CONTROLS - ILLUSTRATIONS

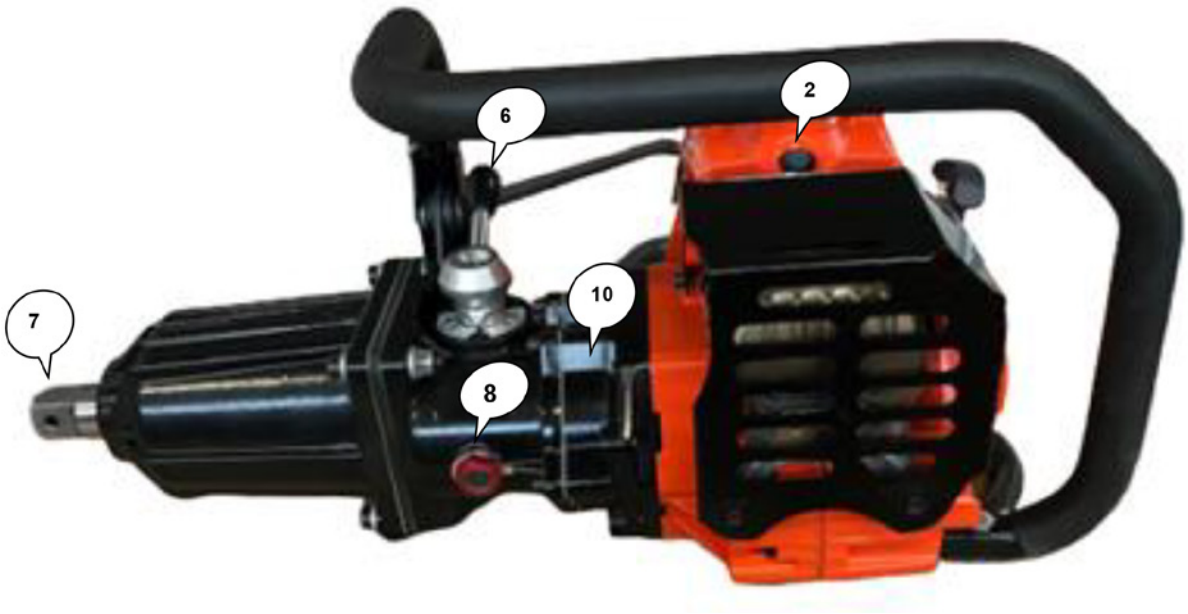

1. Control Switch (Choke/Run/Stop)
2. De-Compression Button
3. Recoil Starter Handle
4. Throttle Trigger
5. Trigger Lock
6. Gear Lever
7. Socket Square Drive - Anvil
8. Oil Filler Plug with Sightglass
9. Fuel Filler Cap
10. Location of Serial Number Label
11. Air Filter Cover Clips
12. Speed Control Regulator

© Airtec International Ltd. All Rights Reserved. No reproduction of whole or part of this Manual is allowed without written Permission of Copyright.

OPERATING CONTROLS

INSTRUCTIONS FOR USE (SEE PAGE 3 FOR LOCATIONS)

1. CONTROL SWITCH Settings

STOP
RUN
CHOKE

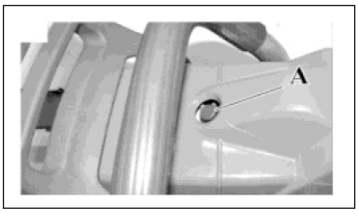

2. DE-COMPRESSION BUTTON

To assist in easy starting. Push in before starting. Comes out Automatically when Motor Starts. **DO NOT** use when Engine is warm

3. RECOIL STARTER HANDLE

Always allow the Starter Cord to return to its position under control and ⚠ **DO NOT allow it to fly back.**

4. THROTTLE TRIGGER

Depress Safety Lock 5 and squeeze Trigger to increase Motor speed

5. TRIGGER LOCK

This is to prevent accidental acceleration

6. GEAR LEVER

This has three positions: marked **N, F and R**

N - Neutral
F - Clockwise Rotation
R - Anti-clockwise Rotation

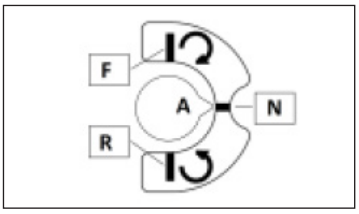

To engage turn **FULLY** 90˚ from the Neutral position. The gears are stationary when the Motor is idling at tickover speed. Select the gear required. If it will not engage, gently squeeze the throttle trigger so the gear parts move slightly.

7. SOCKET SQUARE DRIVE

Standard 1" Square Drive. The Accessory is secured to the Square Drive by a Rubber Ring and a 5mm dia Bright Steel Pin or other suitable retaining device. If the Pin breaks or bends examine both Accessory and Square Drive for possible wear.

⚠ **Worn Accessories damage the Square Drive. A worn Square Drive damages Accessories and both create extra vibration. Replace when worn.**

Use our Master 35 No Go Gauge to check if Anvil and Sockets are worn and need to be replaced.

8. OIL FILLER PLUG

Use for filling, draining and indicating Gearbox oil level.

9. FUEL FILLER CAP

Remove carefully when refilling the Fuel Tank.

10. LOCATION OF SERIAL NUMBER LABEL

First Serial Number for New Master 35 Impact Wrench MA20 A001

11. AIR FILTER COVER CLIPS

12. SPEED CONTROL REGULATOR 2870.4100

Five position Speed Control Regulator

START / STOP OPERATION

1. FUEL MIXTURE
Mix = 1:25 Mineral oil
Mix = 1:50 Synthetic oil

with Unleaded Petrol/ Gasoline minimum 89 Octane, Gasohol with less than 10% Ethanol or E10 fuel

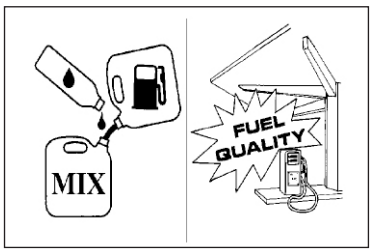

Mix Oil and Petrol/Gasoline thoroughly in a **separate** Safety container before filling the tank. Only fill in a **well ventilated** area and away from equipment which generate sparks e.g. Rail Saws and Grinders.

REMEMBER: Using **too much** Oil will oil up the Spark Plug and too little causes extra wear leading to Engine damage.

2. PREPARATION FOR START-UP

Check oil level in the gear box is correct and all nuts and screws are tight. Fill the fuel tank with the correct mixture. Check starter cord is not worn and Anvil for wear using our No Go Gauge.

3. STARTING THE WRENCH

1 Place Wrench on a SOLID base and take a comfortable stance.

2 Slide Accessory onto Square Drive and secure with a Steel Pin and Rubber Ring or appropriate retaining device.

3 Set Gear Lever (6) to **NEUTRAL (N).**

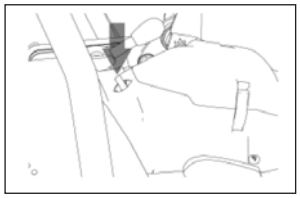

4 Push in De-Compression Button (2) to make starting easier.

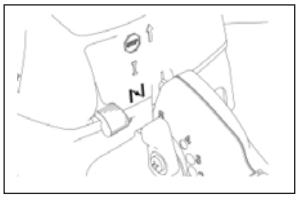

5 Set Control Switch (1) to Choke

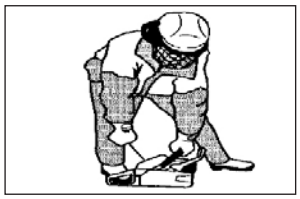

6 Place heel of boot on the extended Handle base or Roll Bar and pull to activate Choke and engine firing cycle.

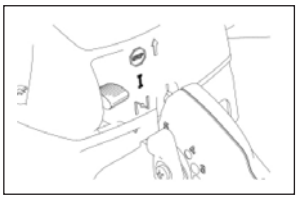

7 After engine fires set Control Switch to RUN and pull Recoil Starter again. The engine should start with one or two pulls.

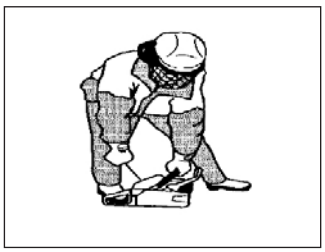

8 Repeat step 3. A few pulls are sufficient to start the engine. If the engine "dies", please repeat steps 2, 3, 4 and 5. The De-Compression Button (2) automatically goes off when the engine fires.

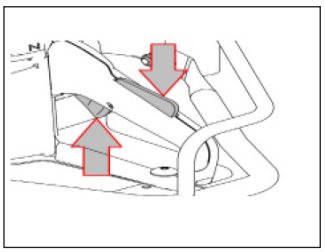

9 When the engine is running pull the trigger to achieve the engine idling.

Note: If the engine is warm it is only necessary to engage the Choke for a few seconds. DO NOT use the De-Compression Button again

4. OPERATING THE WRENCH

Always follow the **"SAFETY PRECAUTIONS"** shown on Page 2. Position Wrench and Socket over fastener to be tightened / loosened and keep all three in a straight line. Select the gear by moving gear lever (6) fully 90˚ to position F or R.

5. STOPPING THE WRENCH

Release throttle trigger and let Motor return to idle. Set Gear lever to Neutral position and turn off Motor by moving Control Switch to the STOP position. DO NOT leave the Wrench idling for more than 2/3 minutes.

6. RE-FUELLING

ALWAYS open the Fuel Filler Cap **carefully** to release any pressure which may have built up.

Never re-fuel when the Engine is running or in a confined space. Do not smoke or attempt to refill in an area where there may be sparks from other machines.

Avoid spillage.

Cold fuel expands in a hot tank. Do not attempt to fill fuel tank if it is hot.

7. TUNING

The Carburettor is Factory set to meet International Emission level regulations with Screws locked to permit only a half turn movement.

Do not force them further or the plastic cap locks will break. Emission levels could then be exceeded.

Tuning should only be attempted by a trained and competent person i.e. Plant Fitter

© Airtec International Ltd. All Rights Reserved. No reproduction of whole or part of this Manual is allowed without written Permission of Copyright.

BASIC WORKSHOP SAFETY RULES GUIDE

⚠ **Only qualified trained Fitters should attempt to service or repair this machine. Your personal safety and those of your fellow workers is your responsibility.**

Please observe all local and national regulations on safety. The undernoted list should be used as a guide.

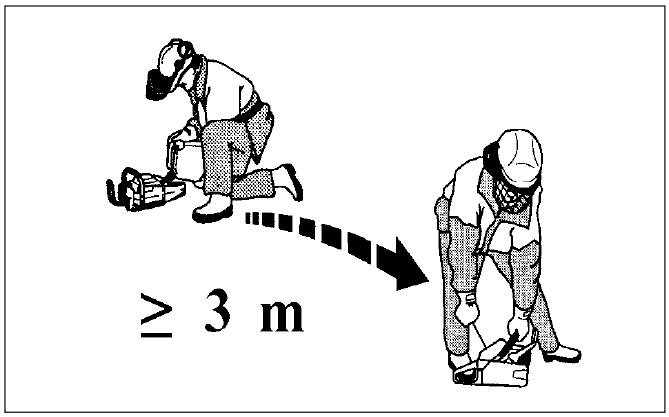

1. Do not run or test any Two Stroke powered Machine in a Workshop or confined space.

This can lead to a build up of poisonous gases and it generates unnecessary noise.

2. Empty fuel from the tank in a safe area before starting work on any Engine.

3. If the Wrench has not been used for some time empty and clean the fuel tank.

4. Under no circumstances smoke in a Workshop area.

5. Keep work areas clean and free from old oil, fuel and dirty rags which could ignite.

6. Do not leave fuel in open containers.

7. Use safety cans for the storage of fuel and do not keep more than the permitted legal quantity in any one place.

8. After repair, test the Wrench using clean properly mixed fuel and do so in a well ventilatedarea.

SAFETY IS EVERYONE'S RESPONSIBILITY.
THINK, ACT, BE SAFE

ROUTINE SERVICE

SEE EXPLODED DIAGRAM DRAWINGS ON PAGES 10-14

1. REPLACING SPARK PLUG 4003.5010

Lift two Cover Clips and lift off Filter Cover 4003.3010. Pull off Spark Plug Cover. Unscrew Spark Plug and replace with Champion RCJ4 or equivalent making sure the gap is set at 0.5mm (0.02").

2. REPLACING AIR FILTER 4003.3080

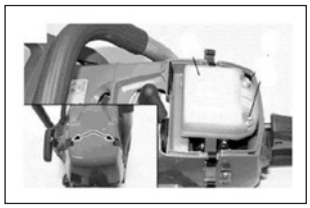

Remove the Filter Cover by lifting the Filter Cover Clips. Loosen the two air filter screws and remove it.

Clean with a suitable degreaser, rinse with water and blast dry with compressed air. Renew the filter if heavily clogged or damaged.

3. REPLACING FUEL FILTER 4003.1075

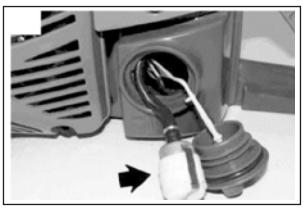

With the Wrench in a vertical position open Fuel Cap 4003.6021 cautiously to release any build-up of pressure in the Fuel Tank. Pull out Fuel Filter and replace if dirty.

4. REPLACING STARTER ROPE 4003.0340

Remove four Screws 4003.2070 holding Starter Assembly 4003.2190 and Screws 2300.0520 off muffler guard and remove Starter Assembly. Hold Pulley 4003.2130 with thumb, cut old cord and allow Pulley to turn slowly back until no tension is left in Recoil Spring 4003.2150. Remove Centre Screw 4003.0690 and Washer 4003.0700 and slowly lift off Pulley. Fit new Rope through Pulley and tie a knot. Feed other end of Rope through Starter Assembly 4003.2190 and into Starter Handle 4003.2180 and again tie a knot. Locate Pulley in Recoil Spring and replace Centre Screw 4003.0690 and Washer 4003.0700. Locate Rope in the notch on outside of pulley, turn clockwise two complete turns then release. Repeat until the Starter Handle returns to the Housing locating hole - Approximately six complete turns when pulled out. Re-attach starter assembly.

5. REPLACE GEAR BOX OIL

Remove three Screws 2300.0512 in Gear Selector 2870.1000 and remove from Gear Box. Empty out old oil. Fill gearbox with 0.25 litres (½ pint) of Gazpromneft Reductor CLP68, Mobil Gerar 626, Carter EP68, Merpoa 68, Valvoline 80-90W or an equivalent non synthetic 68 viscosity Gear Oil. Re-fit Selector and fit screws using a suitable fastener locking fluid.

6. GREASING HAMMER AND ANVIL

Remove three nuts 2310 2061, four Screws 2300.0851 and Nose Casing 035301. Clean out old grease and replace with 130 grammes (4 ½ ozs) of new Molybdenum Disulphate Grease Grade 2 Ensure this is pumped into holes on the side of Hammer Casing 2590.1000 and onto all eight striking faces. Use of the correct quality grease will extend the life of both Anvil and Hammer.

7. ENGINE

Clean Starter Housing and Cylinder Fins at regular intervals. Use either a brush or compressed air. Dirt build up on the cylinder will generate overheating which could then reduce engine performance.

8. CARRYING AND THROTTLE HANDLE

Replace Rubber Mounts when they are ineffective or worn out.

9. ROUTINE MAINTENANCE INSTRUCTIONS

It is recommended a record of inspections and maintenance is kept and each Wrench is given a routine maintenance check every three months. This will reduce maintenance costs, improve efficiency and extend its useful life. Fix a label showing next Service date

DAILY	**Check all Bolts, Screws and Nuts for tightness and gearbox oil level.**
WEEKLY	**Clean Air Filter and Fuel Filter. If necessary use a suitable Solvent.**
MONTHLY	**Clean Spark Plug and check gap is 0.5 m**
THREE MONTHS	**As above plus following:- Clean internal Hammer and Anvil Faces thoroughly and replace Grease.**
SIX MONTHS	**Change Fuel Filter and check condition of Air Filter and Spark Plug**
ANNUALLY	**Replace Gear Box Oil**

Use only GENUINE MASTER SPARE PARTS This will cost less than using non original Spare Parts which generally don't last as long. **Use of non-original parts reduces Wrench life cancels Warranty**

© Airtec International Ltd. All Rights Reserved. No reproduction of whole or part of this Manual is allowed without written Permission of Copyright.

MOTOR - REPAIRS

SEE EXPLODED DIAGRAM DRAWINGS ON PAGES 10-14 AND 16-18

I. REMOVING TOP COVER 4003.3006

Remove Muffler Guard 2650.1670 by loosening four Screws 2300.0520. Lift Top Cover clips to remove Air Filter Cover 4003 3010. Loosen three Screws 4003.2070 and lift Top Cover. Pay attention to pull Spark Plug wire aside, noting position for reconnecting it.

2. REPLACING STARTER RECOIL SPRING 4003.2150

Follow procedure for replacing Starter Rope - See 4 on Page 7. With the Pulley separated from Starter Housing. remove two Screws 4003.0096. Remove old Spring Cassette and replace with new one. Refit screws. When refitting Starter Housing pull Starter Cord to ensure it operates before tightening Screws.

Please Note: The Spring in the Cassette Case is tensioned. Always handle with care

3.REMOVING EXHAUST GUARD2650.I670 and MUFFLER ASSEMBLY 4003.5270

Remove four Screws 2300.0520 holding Exhaust Guard and lift off. Unfasten two Screws 4003.2060 on inside of Exhaust Box and remove it and Gasket 4003.5033 from Motor. When re-assembling tighten screws to 10 Nm (7 3/8 ft/lbs. Warm Muffler by running Engine and tighten screws again. This ensures the Muffler is held on securely.

4. MUFFLER ASSEMBLY

The muffler is fitted with a catalytic converter to comply with international emission regulations.

DO NOT modify or remove it

WARNING

a) DO NOT use the impact wrench if the muffler is damaged or missing. This could cause a fire hazard or damage the operators hearing.

b) The catalytic muffler gets very HOT during use, when idling and remains hot after use. A damaged muffler must be replaced. If it becomes clogged regularly this suggests it is no longer efficient and should be replaced.

5. REMOVING CARBURETTOR 4003.3330 from May 2023

Remove top cover as per section I. then remove two side Screws 2300.0520 from Exhaust Guard, two Manifold Screws 4003.3090 and disconnect Pipes 4003.3310 & 4003.6142 from Carburettor making sure to note re-connecting positions.
Lift and disconnect Throttle Cable 4003.6030 and remove Carburettor.

6. DISMANTLING MOTOR FROM IMPACT UNIT

Remove Carrying Handle 2800.4650 and 2626.5010 complete by removing two nuts 2310.2061. two screws 4003.2050. fixing screw 2580 0814 and four Screws 2300.0635 holding Clutch Support Flange 2600.0460 to the Engine and pull apart.

7. REMOVING FLYWHEEL 4003.2090

Fit Piston Stop Tool 4000.0307 into Cylinder and remove Flywheel Nut 4003.0040. Open Flywheel Ratchet Assembly 4003.1187. Using Puller 4000.0308 remove Flywheel.

8. REMOVING CYLINDER AND PISTON

After completing Sections (I) (3) and (6) remove four Screws 4003.5030 and lift away Cylinder. Using Fine Nose Pliers remove Retaining Clip 4003.0140 and Gudgeon Pin 4003.0800.

To set the torque of the complete cylinder. no. 4 screws 40035030 (3891086R) have to be used. They have to be tightened with Loctite, following these indications: Nm 12, ft lb 9.

9. REMOVE CRANKCASE from FUEL TANK

After completing sections (I) (3) (6) and (7) remove four screws 4003.6050 and Tank by pulling the Trigger Handle gently backwards.

10. REMOVING CRANKSHAFT

Use Piston Stop Tool and remove Clutch 4003.1110. After completing sections (8). (9) and (10) remove seven screws 4003 3230 and split Crankcase. When rebuilding use new Gasket Kit 4003.3190 and two Crankcase Oil Seals 4003.0210

MOTOR - REPAIRS

CONTINUED

CARBURETTOR ADJUSTMENT from May 2023

Special Screwdriver 4000.0335 to adjust the jets L, H and T

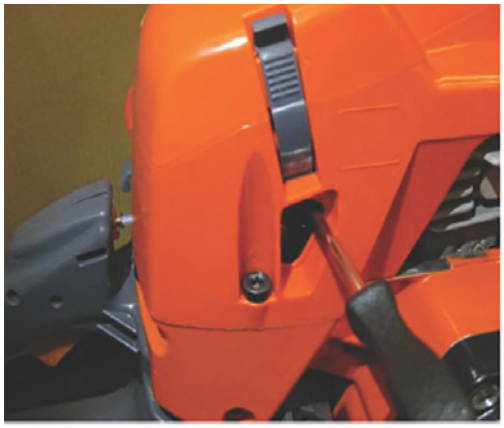

4000.0335

Insert the special screwdriver (as shown on the photo) and adjust the jets

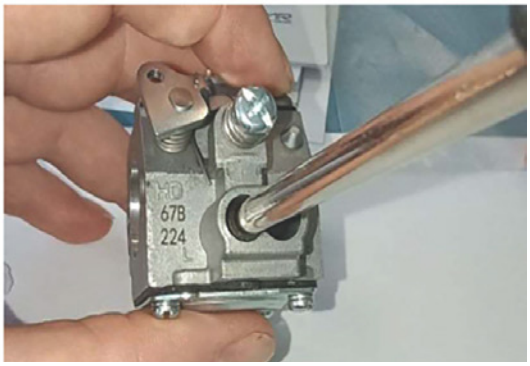

CARBURETTOR TUNING

The jets have the following factory settings
L=2; H=3+3/8
Following a repair or engine overhaul it is necessary to re-tune the Carburettor to its original setting

IDLING ADJUSTMENT (L)

l. Start the unit and warm up for 180 seconds. If the engine stops re-adjust T Screw with Screwdriver 4000.0335

2. Close clockwise the Ljet until the maximum number of rpms are reached. Stop rotating the jet before the rpms drop or the unit stalls.

3. Adjust the T Screw until the unit reaches an idle rpm between: 4800 and 5000 rpm

4. Open the jet L until the rpm goes to 2600/2800rpm

MAXIMUM ADJUSTMENT (H)

Adjust Screw H to a free speed of 9,600-9,800 rpm using tool 4000.0335. Do not exceed 10,000 rpm or the Coil will stop the engine as a safety measure.

© Airtec International Ltd. All Rights Reserved. No reproduction of whole or part of this Manual is allowed without written Permission of Copyright.

MASTER MOTOR PARTS LIST

CARBURETTOR

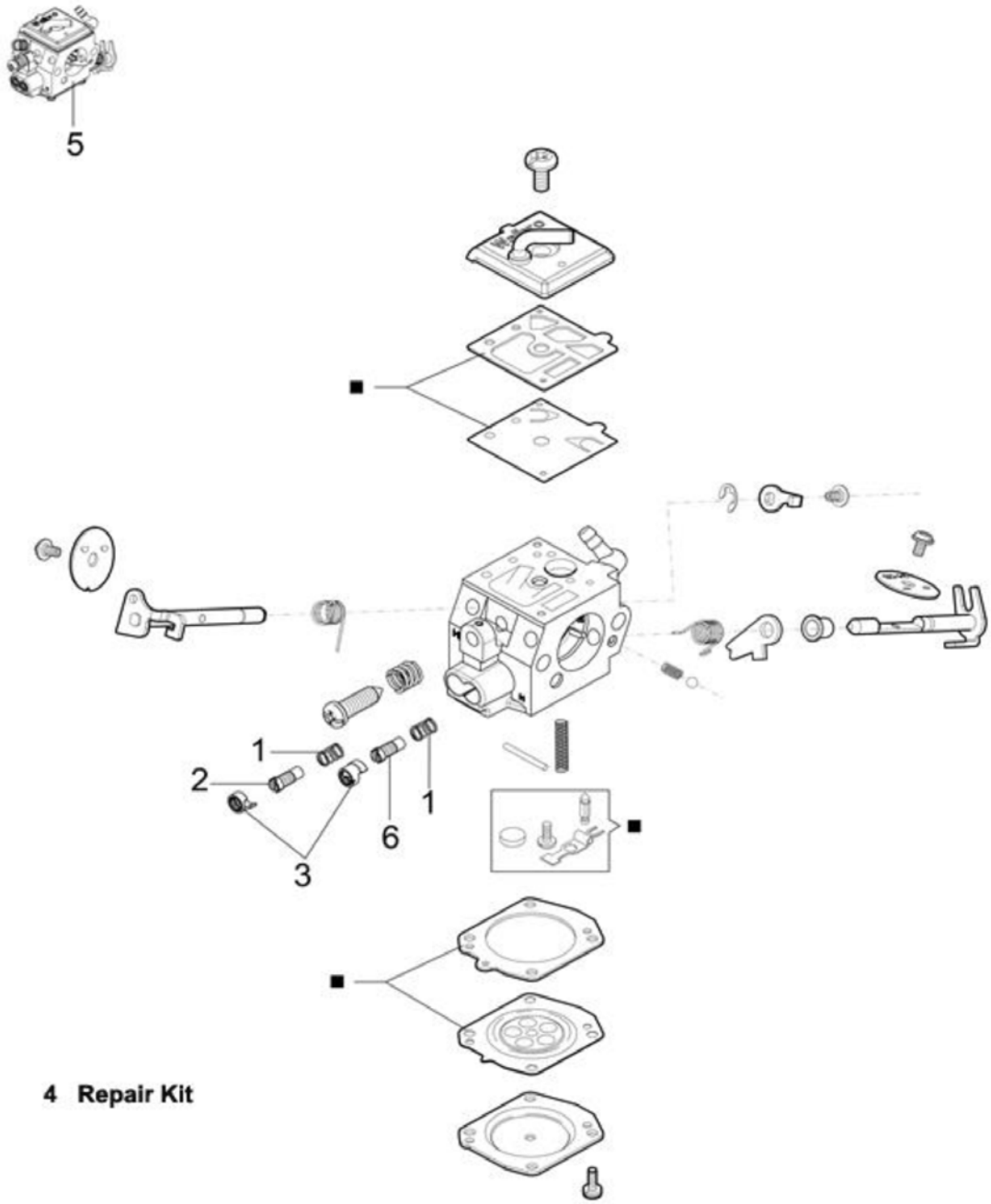

Ref No	Qty	Part No.	Description
1	2	4003.4010	Spring
2	1	4003.4020	Min. Adjustment Screw
3	2	4003.4030	Cap
4	1	4003.4040	Repair Kit
5	1	4003.3330	Carburettor from May 2023
6	1	4003.4050	Max Adjusting Screw

MASTER MOTOR PARTS LIST

CYLINDER & PISTON

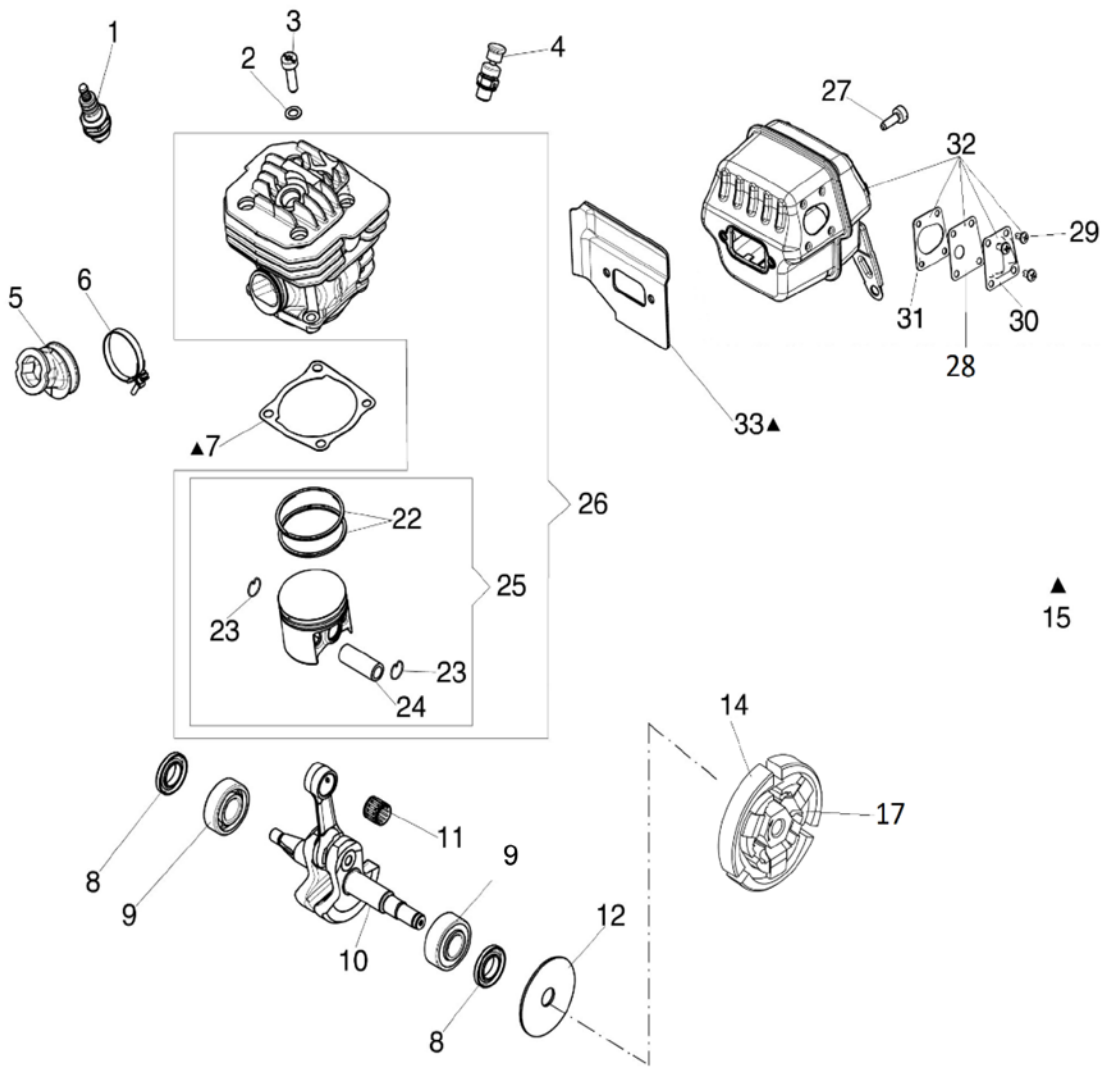

Ref No	Qty	Part No.	Description
1	1	4003.5010	Spark Plug
2	4	4000.0885	Washer
3	4	4003.5030	Screw
4	1	4003.5042	Decompression Button
			(4003.1073)
5	1	4003.5050	Housing
6	1	4003.0390	Spring Ring
7	1	4003.0830	Gasket
8	2	4001.4320	Seal
9	2	4000.0378	Bearing
10	1	4003.5100	Motor Shaft
11	1	4003.0580	Bearing
12	1	4003.0600	Clutch Washer
14	1	4003.1110	Clutch Complete

Ref No	Qty	Part No.	Description
15	1	4003.3190	Gasket Kit
17	1	4003.0050	Spring
22	2	4003.5170	Piston Ring
23	2	4003.0140	Spring Clip 72.01198
24	1	4003.0800	Gudgeon Pin
25	1	4003.5200	Piston Kit
26	1	4003.5210	Complete Cylinder
27	2	4003.2060	Screw
28	1	4003.5230	Gasket
29	4	4003.5240	Screw
30	1	4003.5250	Deflector
31	1	4003.5260	Seal
32	1	4003.5270	Complete Muffler
33	1	4003.5033	Seal

© Airtec International Ltd. All Rights Reserved. No reproduction of whole or part of this Manual is allowed without written Permission of Copyright.

MASTER MOTOR PARTS LIST

FUEL TANK

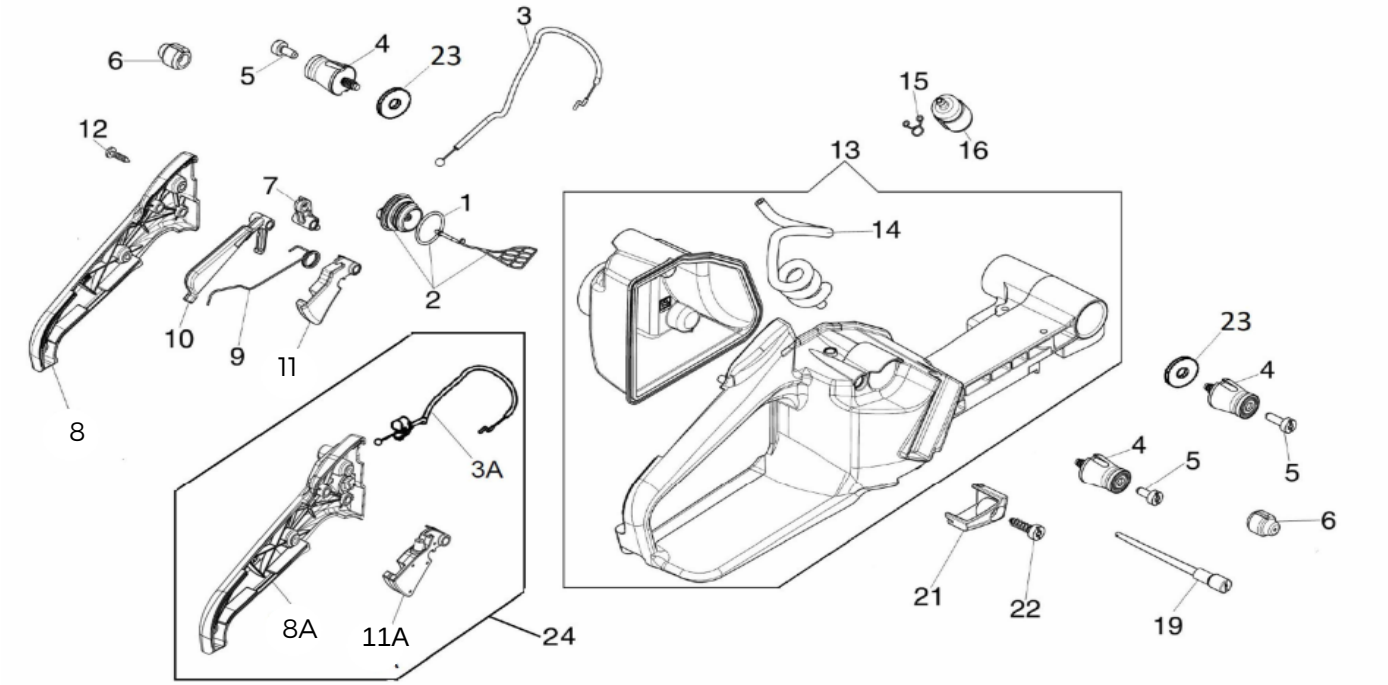

Ref No	Qty	Part No.	Description
1	1	4003.0470	'O' Ring
2	1	4003.6021	Fuel Filler Cap (was 4003.6020)
3	1	4003.6030	Throttle Cable
3A	1	2870.4050	Throttle Cable
4	4	4003.6040	Antivibration Bush
5	1	4003.6050	Screw
6	2	4003.0870	Rubber Mount
7	1	4003.6070	Cam
8	1	4003.6110	Throttle Cover
8A	1	2870.4070	Throttle Cover c/w Speed Control
9	1	4003.6090	Spring
10	1	4003.6100	Lever
11	1	4003.6080	Throttle Trigger
11A	1	2870.4010	Throttle Trigger
12	3	4003.6120	Screw
13	1	4003.6130	Fuel Tank only
14	1	4003.6142	Tube
15	1	1708.0070	Fastening Clip
16	1	4003.1075	Fuel Filter
19	1	4003.0460	Vent Tube
21	1	4003.6150	Cover
22	3	4003.2050	Screw
23	2	4003.6160	Spacer
24		2870.4100	Complete Speed Regulator (3A + 8A + 11A)
	1	2800.0650	Fuel Tank Complete – as shown above

Items 3, 8 & 11 up to Machine MB21T999

Items 3A, 8A & 11A from Machine MB22A001

MASTER MOTOR PARTS LIST

STARTER ASSEMBLY

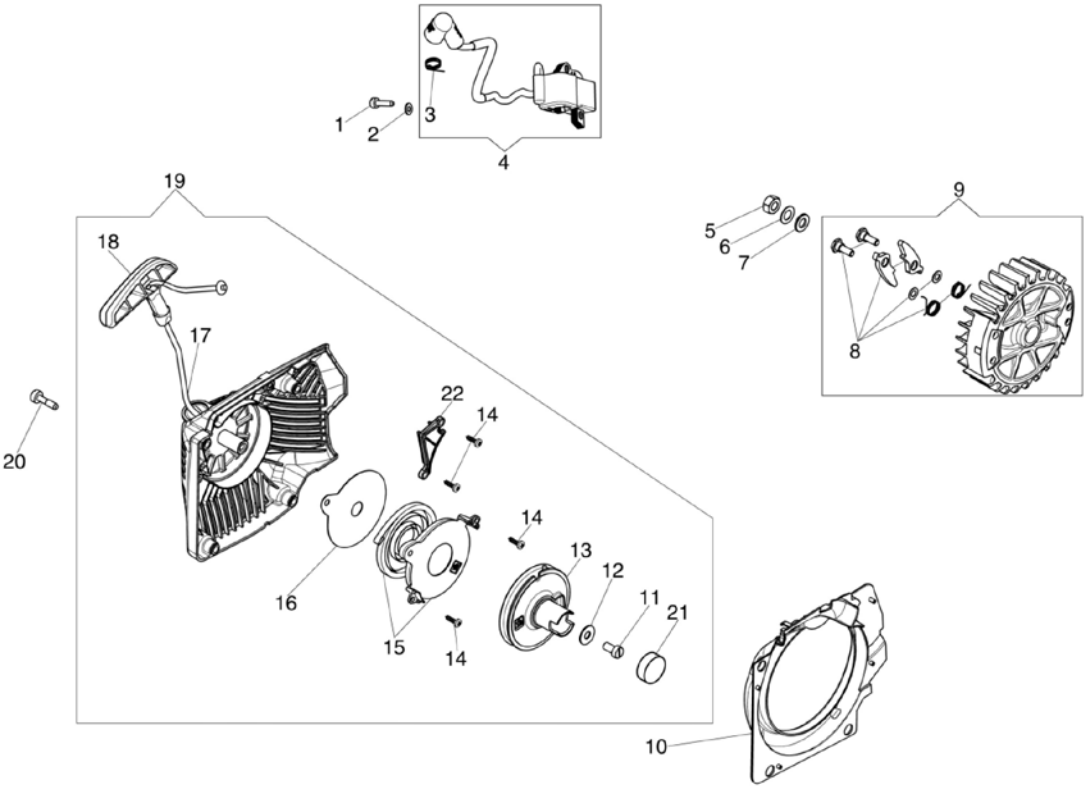

Ref No	Qty	Part No.	Description
1	2	4003.2010	Screw
2	2	4003.0100	Washer
3	1	4003.2030	Spring
4	1	4003.2110	Coil (was 4003.2040)
5	1	4003.0040	Nut
6	1	4003.0670	Washer
7	1	50.00361	Washer
8	1	4003.0440	Flywheel Ratchet Assembly
9	1	4003.2090	Flywheel Kit
10	1	4003.2100	Flange
11	1	4003.0690	Screw
12	1	4003.0700	Washer
13	1	4003.2130	Starter Pulley
14	4	4003.0096	Screw
15	1	4003.2150	Starter Spring
16	1	4003.2160	Washer
17	1	4003.0340	Starter Rope
18	1	4003.2180	Starter Handle
19	1	4003.2190	Starter Assembly
20	4	4003.2075	Screw
21	1	4003.2210	Plug
22	1	4003.2220	Cover

© Airtec International Ltd. All Rights Reserved. No reproduction of whole or part of this Manual is allowed without written Permission of Copyright.

MASTER MOTOR PARTS LIST

TOP COVER AND CRANKCASE

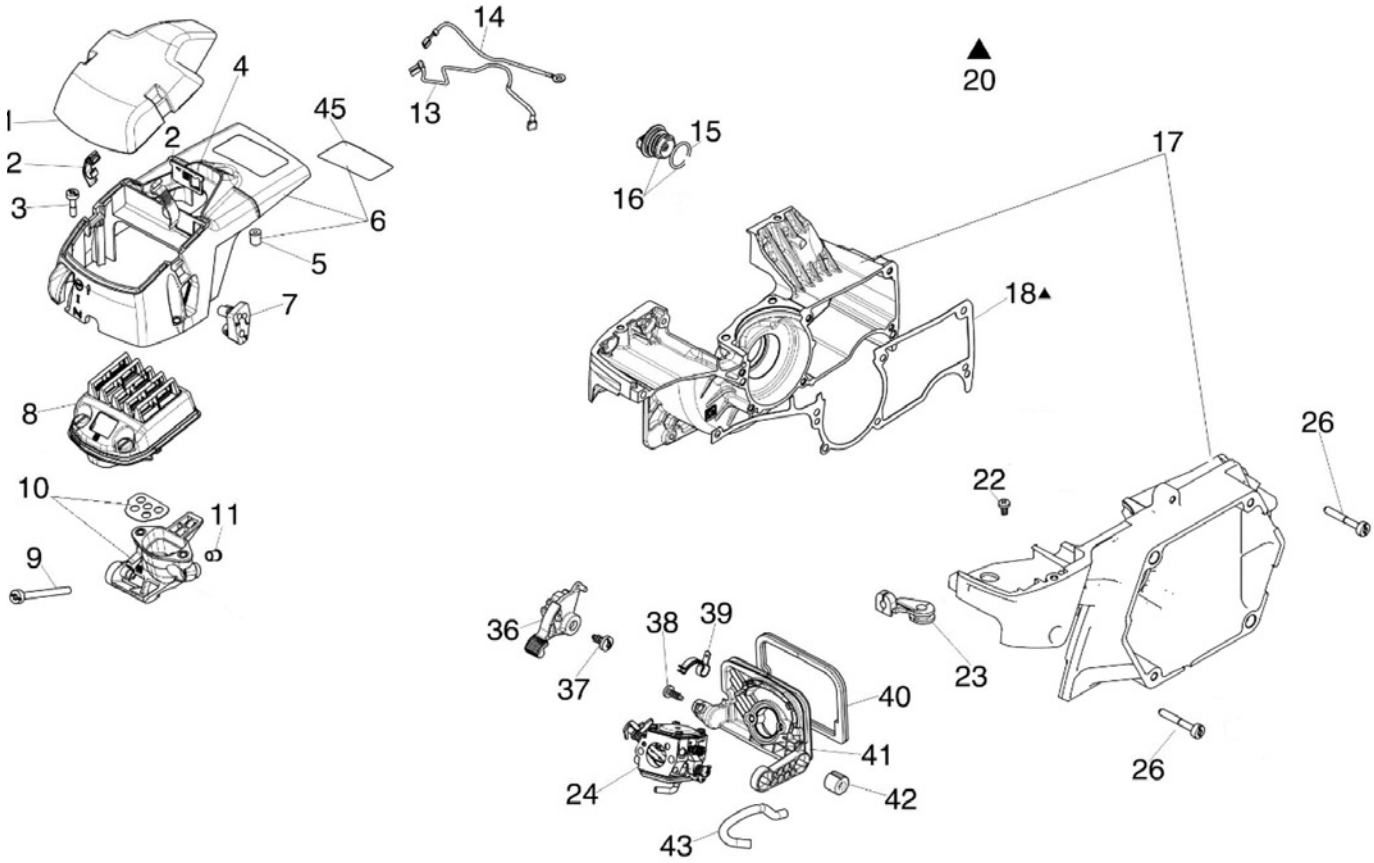

Ref No	Qty	Part No.	Description
1	1	4003.3010	Filter Cover
2	2	4003.3020	Clip
3	2	4003.2070	Screw
4	1	4003.3040	Deflector
5	1	4003.3050	Spacer
6	1	4003.3006	Cover
7	1	4003.3070	Guide
8	1	4003.3080	Air Filter
9	2	4003.3090	Screw
10	1	4003.3100	Filter Support
11	2	4003.3120	Bush
13	1	4003.3130	Ground Cable
14	1	4003.3140	Cable
15	1	4003.3150	Ring
16	1	4003.1192	Fuel Filter Cap

Ref No	Qty	Part No.	Description
17	1	4003.3170	Crankcase
18	1	4003.3180	Gasket
20	1	4003.3190	Gasket Kit
22	1	4003.3200	Screw
23	1	4003.3210	Cable Entry
24	1	4003.3330	Carburettor from May 2023
26	7	4003.3230	Screw
36	1	4003.3240	Stop Lever
37	1	4003.3250	Screw
38	1	4003.3260	Screw
39	1	4003.3270	Spring
40	1	4003.3280	Seal
41	1	4003.3290	Support
42	4	4003.3300	Antivibration Mount
43	1	4003.3310	Vent tube
45	1	4003.3320	Protection

IMPACT UNIT - REPAIRS

SEE EXPLODED DIAGRAM DRAWINGS ON PAGES 16-17

1. REMOVING CLUTCH SUPPORT FLANGE 2600.0460

After completing section 10 Motor Repairs Page 8 remove Gear Selector 035304 and empty oil from Gearbox 2860.3065

Remove six Screws 4003.0635 holding Clutch Support Flange to Gearbox and pull apart.

Always use a suitable thread lock when rebuilding.

2. REMOVING CLUTCH 4003.1110

Remove Spark Plug 4003.5010 and fit Piston Stop Tool 4000.0307.

Turn Clutch in clockwise direction and remove. If replacing fit a new clutch washer 4003.0600 Assemble in reverse order.

3. REPLACING SEAL 2342.4370 & BEARINGS 2332.0200 IN CLUTCH SUPPORT FLANGE 2600.0460

Remove Circlip 2321.0200 and using a Soft Face Mallet tap out Clutch Ring 2690.7300.

Remove Circlip 2322.0420 and from the opposite side push out Bearings 2332.0200.

Remove Oil Seal 2342.4370 and replace if necessary. Assemble in reverse order.

4. DISMANTLING GEARBOX 2860.3065

Remove Ring Flange 035561 and check Bearings 2332.0351 and 2332.0300 and replace Oil Seal 2343.0520. Remove Cluster Gear Shaft 2690.6000 and check for damage.

Note position of Gear Cluster 035104 before removal for rebuild purposes.

Remove Circlip 2321.0160 and lift off Drive Gear 2640.7300 then remove Circlip 135516 and from the opposite side tap Drive Gear Shaft 035119 using a Flat Punch and remove with Bearing 2331.0170. Check for wear and damage.

Remove Satellite Gear 035551 by tapping inwards and then remove it and the Gear Cluster.

Check both for wear or damage. Assemble in reverse order.

When rebuilding the Gearbox always fit new Seals and Gaskets. Use Gasket Kit 2890.1065

Please Note:

The Satellite Gear has a chamfered edge which MUST be re-fitted in the same way as before.

5. DISMANTLING COMPLETE HAMMER 035309

Place complete Hammer Assembly length ways in a vice with one hole uppermost. Carefully tighten vice until Steel Ball 2360.1032 drops out of the lower hole - a short blast of air will assist this operation. Loosen vice and turn Hammer over to opposite hole and repeat previous instruction to allow second ball to be removed and loosen vice again. Hammer Assembly 035302 can now be separated. Remove Shaft 035567, Spring 035566 and Bearing 2334.0210 and inspect for wear and damage.

Re-grease as per Routine Service item 6 on Page 7 and assemble in reverse order.

Inspect Anvil 035572 and Hammer 035302 striking faces for wear or damage. These are critical areas which will affect the Wrenches performance and vibration. Refit Hammer and Anvil to Gearbox and replace Nose Casing 035301 with new Gasket 035562.

6. ANVIL 035572

The Square Drive is 1" (25.4mm). If this wears by 1mm (1/32") or more replace it immediately.

The wear can be checked using our No Go Gauge.

A worn Anvil reduces speed of operation, increases vibration, damages Sockets and Accessories and the Wrench.

© Airtec International Ltd. All Rights Reserved. No reproduction of whole or part of this Manual is allowed without written Permission of Copyright.

IMPACT UNIT,GEARBOX AND CARRYING HANDLE

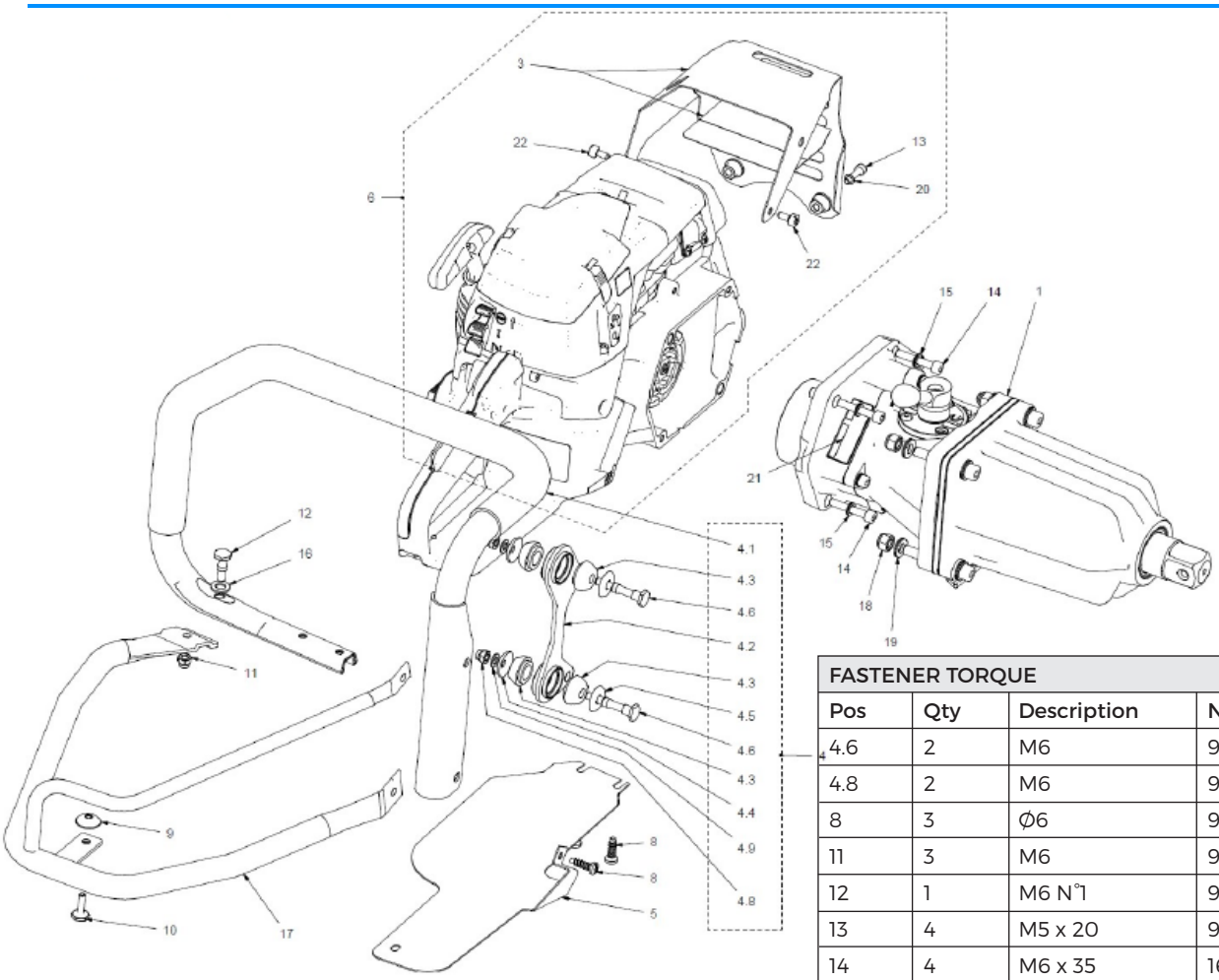

FASTENER TORQUE				
Pos	Qty	Description	Nm	ft lb
4.6	2	M6	9	7
4.8	2	M6	9	7
8	3	Ø6	9	7
11	3	M6	9	7
12	1	M6 N°1	9	7
13	4	M5 x 20	9	7
14	4	M6 x 35	16	12
18	2	M8	35	26

Ref No	Qty	Part No.	Description
1	1	2870.0610	Impact Wrench excluding Motor
3	1	2650.1670	Exhaust Guard (2650.1660)
4	1	2811.4650 (was 2800.4653)	Compl.Anti Vibration Handle
4.1	1	2620.5200	Handle
4.2	1	035129	Side Support
4.3	4	54.00227	Rubber Mount
4.4	2	4000.3290	Cap
4.5	2	54.00563	Cap
4.6	2	2580.0085	Screw
4.8	2	2310.2061	Locknut
4.9	2	2400.1050	Lock Washer
5	1	2650.1050	Fuel Tank Protection Plate
6	1	2810.1072	Engine Complete

Ref No	Qty	Part No.	Description
8	3	4003.2050	Screw
9	1	2700.0200	Retention
10	1	2580.0050	Fixing Screw
11	1	2310.2061	Locknut
12	1	2580.0814	Screw
13	4	4003.2070	Screw
14	2	2300.0635	Screw
15	4	2400.7060	Lock Washer
16	4	2400.2080	Flat Washer
17	1	2626.5010	Roll Bar only
18	2	2310.2081	Lock Nut
19	2	2400.8080	Lockwasher
20	4	2400.1050	Lockwasher
21	1		Serial Number Label
22	1	4003.6050	Screw

Items 13 & 20 replaced by 4003.2075 from MB23A001

IMPACT UNIT AND GEARBOX - DETAILED

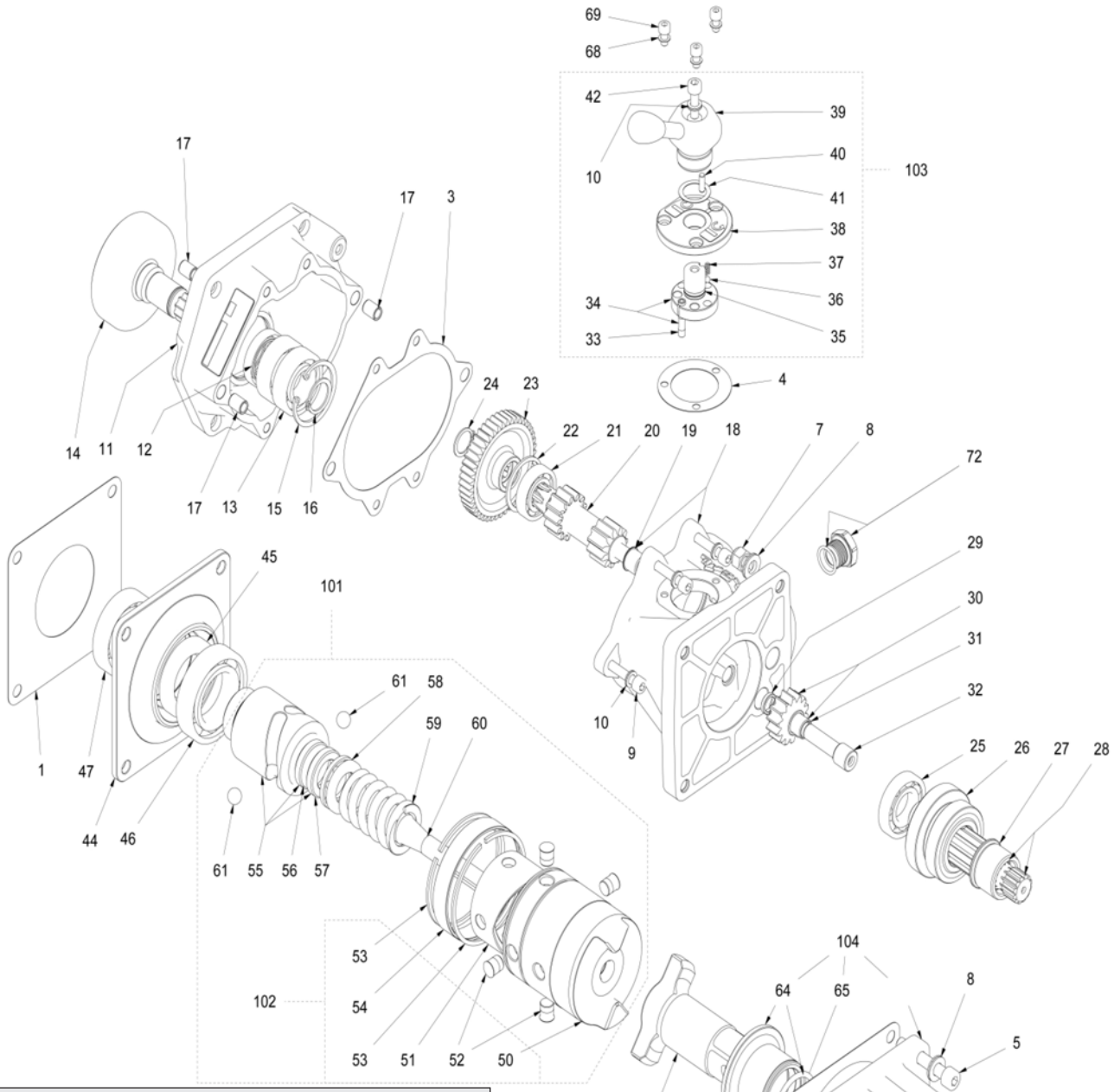

FASTENER TORQUE				
Pos	Qty	Description	Nm	ft lb
5	3	M8 x 50	35	26
6	1	M8 x 55	35	26
7	1	M8	35	26
9	6	M6 x 35	16	12
42	1	M6 x 20	10	7
69	2	M5 x 10	6	5
72	1	⅜”	22	16

© Airtec International Ltd. All Rights Reserved. No reproduction of whole or part of this Manual is allowed without written Permission of Copyright.

IMPACT UNIT AND GEARBOX - DETAILED

Ref No	Qty	Part No.	Description
1	1	035560	Flange Gasket
2	1	035562	Gasket
3	1	2500.2065	Gasket
4	1	035115	Gasket
5	3	2300.0851	Screw
6	1	2300.0856	Screw
7	3	2310.2081	Locknut
8	5	2400.8080	Lock Washer
9	6	2300.0635	Screw
10	7	2400.7060	Lock Washer
11	1	2600.0460	Clutch Flange
12	1	2342.4370	Seal Ring 24 x 37 x 7
13	2	2332.0200	Bearing
14	1	2690.7300	Clutch Ring
15	1	2322.0420	Stop Ring 42
16	1	2321.0200	Stop Ring 20
17	4	2540.7090	Plug
18	1	2860.3065	Gearbox
19	1	035106	Bronze Bush
20	1	035119	Gear
21	1	2331.0170	Bearing
22	1	135516	Circlip
23	1	2640.7300	Drive Gear
24	1	2321.0160	Circlip
25	1	2331.0200	Bearing
26	1	035104	Gear Cluster
27	1	035103	Bush
28	1	2690.6000	Cluster Gear Shaft
29	1	035548	Bronze Bush
30	1	035551	Gear with Bush
31	1	035548	Bronze Bush
32	1	035549	Satellite Pin
33	1	2580.0090	Gear Lever
34	1	035112	Gear Selector
35	1	135114	O Ring
36	1	2360.0397	Ball

Ref No	Qty	Part No.	Description
37	1	035523	Spring
38	1	035111	Gear Lever Flange
39	1	035107	Reverse Lever
40	1	035554	Pin
41	1	135110	Ring
42	1	2300.0620	Screw
44	1	035561	Ring Flange
45	1	2343.0520	Ring Seal
46	1	2332.0351	Bearing
47	1	2332.0300	Bearing
50	1	035568	Hammer Casing
51	1	035538	Cam
52	4	035537	Steel Plug (4)
53	2	135533	Seeger Ring
54	1	035536	Steel Ring
55	1	035565	Catch
56	1	035586	Stop Bush
57	1	035585	Guide Bush
58	1	2334.0210	Bearing
59	1	035566	Spring
60	1	035567	Central Shaft
61	2	2360.1032	Ball 13/32"
62	1	035572	Anvil
64	1	033005	Nose Casing Bush
65	1	135542	'O' Ring
67	1	135153	Foot Rest
68	3	2400.1050	Lock Washer
69	3	2300.0512	Screw M5x12
72	1	135520	Oil Plug
100	1	2890.1065	Set of Gaskets
			1,2,3,4,12,45,65
101	1	035309	Impact Assembly
102	1	035302	Hammer Assembly
103	1	035304	Gear Selector Assembly
104	1	035301	Nose Casing and Bush

TROUBLESHOOTING ADVICE

⚠ **Always stop Impact Wrench and disconnect Spark Plug before carrying out any of the following procedures unless they require operation.**

If these solutions do not solve the problem please contact your approved Service Centre.

PROBLEM	POSSIBLE CAUSE	SOLUTION
Engine will not start or will run for only a few seconds after starting (please check ignition switch is in START position 1)	1. No spark 2. Flooded Engine	1. Watch for spark at spark plug tip. If there is no spark, repeat test with a new spark plug (RCJ-4) 2. Check Stop Switch and stop wire. 3. Check Coil for correct operation. 2. Set the On/Off Switch to STOP. Release the Cover Clips and remove Spark Plug and open throttle fully. Pull Starter rope several times to clear the Combustion chamber. Refit Spark Plug and Plug Cover firmly. Set the On/off Switch to Run and re-start engine.
Engine starts but will not accelerate properly or will not run properly at high speed	Carburettor requires adjustment	Contact your Service Dealer
Engine does not reach full speed and/ or emits excessive smoke	1. Check oil fuel mixture 2. Air Filter dirty 3. Carburettor requires adjustment	1. Use fresh fuel and the correct 2 cycle oil mix. 2. Clean per instruction in Maintenance – Air Filter Section. 3. Contact Service Dealer
Engine starts, runs and accelerates but will not idle	Carburettor requires adjustment	Turn Idle speed screw "T" clockwise to increase Idle Speed. See Operation – Carburettor Adjustment.

GENERAL INFORMATION

1. Toolkit Part No. 1140.1011 – Only supplied complete

Allen Key 4mm
Allen Key 5mm
Allen Key 6mm
Spanner 10-13mm
Spark Plug Combination Spanner
8mm Tube Spanner
Spanner 22mm }
Screwdriver }
Torx Spanner T27
Fuel Funnel

2. Storage

a) Empty and clean the Fuel Tank and Gearbox.
b) Dispose of fuel and oil safely in accordance with local regulations.
c) Start the engine to use up any fuel left in the Carb and avoid damage to the Diaphragm.
d) Store the Wrench in a dry area.
e) Keep off the floor and away from sources of heat.

3. Scrapping the Wrench

a) Most of the parts can be recycled. Please check local regulations
b) Avoid pollution of soil, air and water.
c) Please destroy the CE machine label and Manual.

© Airtec International Ltd. All Rights Reserved. No reproduction of whole or part of this Manual is allowed without written Permission of Copyright.

WORKSHOP TOOLS

40000309
ELECTRONIC REV. COUNTER

40000307
PISTON LOCK/STOP

40000324 (was 40000313)
COMPRESSION TEST KIT

40028059
COIL/FLYWEHEEL GAUGE

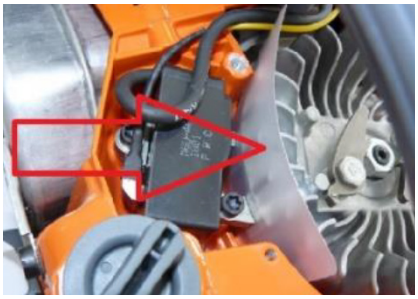

40000355
PRESSURE GAUGE

40000308
FLYWHEEL PULLER

40028090
EXHAUST FLANGE

40000306
SPANNER FOR RUBBER MOUNTS

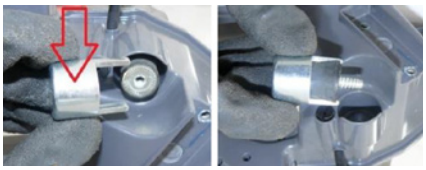

40028060
INTAKE FLANGE

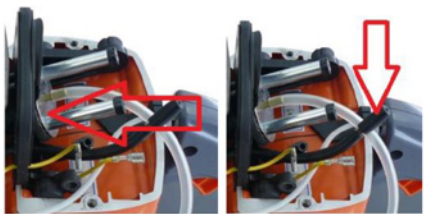

40000303 - SCREWDRIVER FOR CARB ADJUSTMENT (OLD MASTER)
40000327 - SCREWDRIVER FOR CARB ADJUSTMENT (NEW MASTER)

40000335
SCREWDRIVER FOR CARB. ADJUSTMENT (NEW MASTER)

4000.0290
WORKSHOP TOOLKIT

Contains all Tools and Equipment shown above except Electronic Rev. Counter plus Flange Cover 4000.0315 and tools for old Master Impact Wrench

ACCESSORIES - RAILWAY QUALITY

TOOL CARRIERS & ACCESSORIES

Three versions for Standard, Narrow and Broad Gauge track

VERTICAL

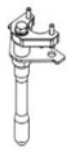

HORIZONTAL

METAL CARRYING BOX
Will hold a Wrench and Accessories

NO GO GAUGE
Check for wear on Sockets and Wrench Anvil

PINS, RINGS AND MAXI CLIPS

IMPACT

SOCKETS – ⅞"
For use on all Track Screwing Machines, Quick Release and Standard type
All sizes Imperial and Metric–Square, BiSquare, Rectangular and Hexagon

SOCKETS - 1"
Over one hundred Imperial and Metric sizes - Square, Bi-Square, Rectangular, Hexagon and Butterfly–Standard and Deep

EXTENSIONS ALL SQUARE DRIVES
150 to 400mm (6" to 16")

AUGERING - 1"

ATTACHMENTS

European Hex
American Hex
Graff. Round

AUGER BITS FOR WOODEN SLEEPERS/TIES

European Hex
10 to 22mm (⅜" to ⅞")
Graff. Round
12 to 18mm (½" to ¾")
Graff. Round with Reamer
12 to 20mm (½" to ¾")

SPECIALS

We manufacture a wide range of special shank Auger Bits and Impact Sockets of all shapes, lengths and Square Drives. Please send us your enquiries

BUY YOUR GENUINE SPARE PARTS AND ACCESSORIES FROM OUR AUTHORISED DISTRIBUTOR

© Airtec International Ltd. All Rights Reserved. No reproduction of whole or part of this Manual is allowed without written Permission of Copyright.

AIRTEC
INTERNATIONAL LTD

New Master35© Impact Wrench
from MA20 A001

+44 (0) 141 552 5591
enquiries@airtecinternational.co.uk
www.airtecinternational.co.uk

© Airtec International Ltd. All Rights Reserved.
No reproduction of whole or part of this Manual is allowed
without written Permission of Copyright.